FEB-24E UK SUPERCOMPACT

COMBINATION BOILER

USER MANUAL

BOILER OUTPUT

To Domestic Hot Water:

Minimum 7.6 kW	(25,932.26 Btu/h)
Maximum 23.7 kW	(80,867.71 Btu/h)

To Central Heating:

Minimum 7.6 kW	(25,932.26 Btu/h)
Maximum 23.7 kW	(80,867.71 Btu/h)

EC-TYPE EXAMINATION CERTIFICATE
PIN0099BN794

Morco Products Ltd
Riverview Road, Beverley, East Yorkshire, HU17 0LD
Telephone 01482 325456 Fax 01482 212869

AENOR Asociación Española de Normalización y Certificación

CERTIFICADO DE EXAMEN CE DE TIPO
EC-TYPE EXAMINATION CERTIFICATE

PIN0099BN794

Nº Certificado: **A01/001633**
Certificate nº:

Nº de expediente: **A01/S000092**
File number:

Producto: **CALDERA DE CALEFACCIÓN CENTRAL (TIPO C)**
Product: CENTRAL HEATING BOILER (TYPE C)

Licenciatario: **FAGOR ELECTRODOMESTICOS, S. COOP.**
Licensee:
BO SAN ANDRÉS, 18
20500 MONDRAGON
(Guipúzcoa - ESPAÑA)

Como consecuencia de la aplicación del artículo 1 del anexo II de la Directiva 90/396/CEE, se ha ensayado una muestra del producto y ha resultado conforme con las exigencias esenciales de la Directiva. Este certificado de conformidad no implica valoración del conjunto de los productos fabricados.

Este certificado ha sido extendido por un organismo notificado a los Estados Miembros y a la Comisión de las Comunidades Europeas, de acuerdo con las disposiciones del artículo 9 de la Directiva sobre los aparatos de gas (90/396/CEE).

As result of applying the article 1 of the Annex II of the 90/396/EEC Directive, a sample of the product has been tested and considered in accordance with the essential requirements of the Directive. This certificate of conformity does not imply the assessment of all the products manufactured.

This certificate has been issued by a notified body to the Member States and the European Community Commission, according to the article 9 of the Gas appliances Directive.

PAÍS *Country*	CATEGORÍAS *Categories*	PRESIONES DE SUMINISTRO *Supply Pressures*
AT, DK, FI, NO, EE, SE	I2H	20
CY	I3+	28-30/37
DE	I2E	20
ES, GB, IE, IT, CH, CZ	II2H3+, II2H3P, I2H, I3+, I3P	20-28/37, 20-37, 20, 28/37, 37
FR, BE	II2E+3+, II2E+3P, I2E+, I3+, I3P	20/25-28/37, 20/25-37, 20/25, 28/37, 37
GR, PT	II2H3+, II2H3P, I2H, I3+, I3P	20-30/37, 20-37, 20, 30/37, 37
LT, MT	I3B/P	30
LV	II2H3+	20, 28-30/37
NL	I3B, I3P	30, 37
PL	II2E3P, I2E, I3P	20-37, 20, 37
SI, SK	I2H, II2H3P	20, 20-37

TIPO DE INSTALACION *Type of Installation*	PODER CALORIFICO *CALORIFIC VALUE*	CODIGO EVACUACION *FLUE CODES*
Mural / Wall-hung	Hi	C12, C32, C42, C52, C82, B22

MARCA *TRADE MARK*	MODELO *MODEL*	SERVICIO *SERVICE*	Qn (kW) *Qn (kW)*	Qmin (kW) *Qmin (kW)*	Pn (kW) *Pn (kW)*	Pmin (kW) *Pmin (kW)*
FAGOR	FE-24E F	Calefacción y ACS / Heating and production of sanitary hot water	26	8,3	23,7	7,6
FAGOR	FE-24E IT		26	8,3	23,7	7,6
FAGOR	FE-24E UK		26	8,3	23,7	7,6
FAGOR	FE-24EMA F		26	8,3	23,7	7,6
FAGOR	FE-24EMA IT		26	8,3	23,7	7,6
FAGOR	FE-24EMA UK		26	8,3	23,7	7,6
FAGOR	FE-24EMA		26	8,3	23,7	7,6
FAGOR	FE-24EX F		26	8,3	23,7	7,6
FAGOR	FE-24EX IT		26	8,3	23,7	7,6
FAGOR	FE-24EX UK		26	8,3	23,7	7,6
FAGOR	FE-24EX		26	8,3	23,7	7,6
FAGOR	FE-24E		26	8,3	23,7	7,6
FAGOR	FEB-24E		26	8,3	23,7	7,6
FAGOR	FEE-24MA F		26	8,3	23,7	7,6
FAGOR	FEE-24MA IT		26	8,3	23,7	7,6
FAGOR	FEE-24MA UK		26	8,3	23,7	7,6
FAGOR	FEE-24MA		26	8,3	23,7	7,6
MORCO	FEB-24E		26	8,3	23,7	7,6
FAGOR	FE-24EAS F	Sólo calefacción / Only heating	26	8,3	23,7	7,6
FAGOR	FE-24EAS IT		26	8,3	23,7	7,6
FAGOR	FE-24EAS UK		26	8,3	23,7	7,6
FAGOR	FE-24EAS		26	8,3	23,7	7,6
FAGOR	FE-24EC F		26	8,3	23,7	7,6
FAGOR	FE-24EC IT		26	8,3	23,7	7,6
FAGOR	FE-24EC UK		26	8,3	23,7	7,6
FAGOR	FE-24EC		26	8,3	23,7	7,6

Fecha de emisión: **2002-10-03**
Date of issue:

Fecha de modificación: **2004-05-18**
Modified on:

AENOR Asociación Española de Normalización y Certificación
Ramón NAZ PAJARES
El Director General/General Manager

CONTENTS

Section		Page
1	USERS INSTRUCTIONS	4
2	GENERAL SPECIFICATIONS	7
3	TECHNICAL DATA	9
4	GENERAL INSTALLATION REQUIREMENTS	10
5	INSTALLATION INSTRUCTIONS	13
6	COMMISSIONING INSTRUCTIONS	15
7	ROUTINE SERVING INSTRUCTIONS	16
8	TROUBLESHOOTING (SELF DIAGNOSTIC CODES)	17/18

1.- USERS INSTRUCTIONS

GAS SAFETY (INSTALLATION AND USE) REGULATIONS 1998 (AS AMENDED)

It is the law that all gas appliances are installed by a registered person, in accordance with the above regulations. Failure to install appliances correctly could lead to prosecution. It is in your own interest, and that of safety, to ensure that the law is complied with.

Read these instructions carefully before attempting to operate the appliance. Comply with all applicable warnings. Do not interfere with any sealed components, and use the appliance only in accordance with these instructions.

INTRODUCTION

The Fagor FEB-24E is a wall hung, room sealed, fan assisted, microprocessor controlled, fully modulating gas combination boiler for providing both central heating and domestic hot water.

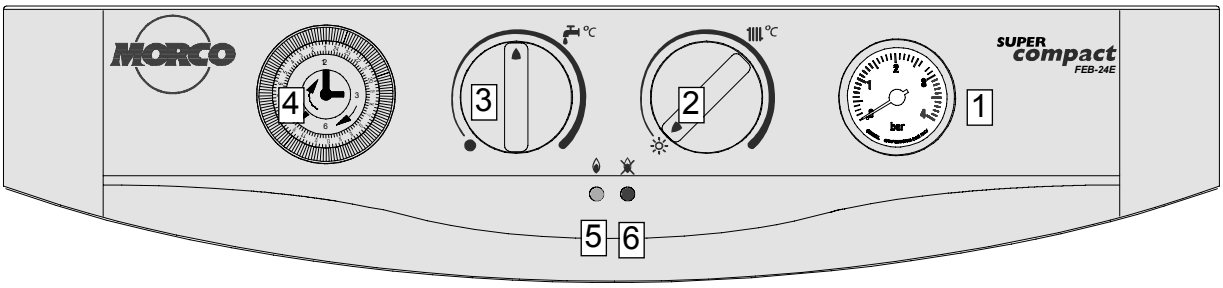

1.-Pressure gauge
2.-Heating service and heating temperature selector
3.-Main control, reset and D.H.W temperature selector
4.-Clock
5.-Green light power on and flashing burner on
6.-Red light- lock out

DOMESTIC HOT WATER SERVICE

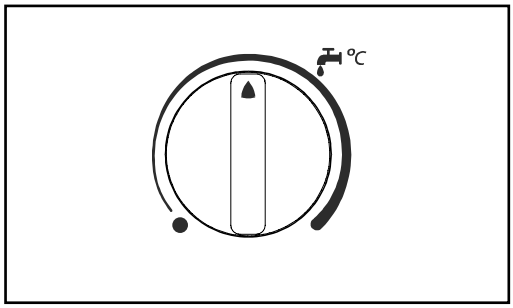

Turn the main control switch setting in order to turn the boiler on. The green light will come on indicating that the boiler is ready to supply domestic hot water whenever there is a demand for it.

When a hot tap is opened the boiler automatically fires to deliver hot water, and the green light flashes indicating the burner is on. A water temperature of between 35° and 60° C can be selected by turning the domestic hot water temperature regulating knob.

HOT WATER AND CENTRAL HEATING SERVICE

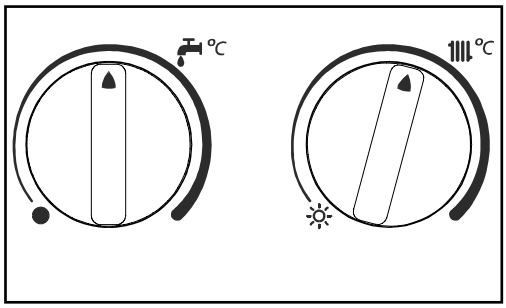

With the main control switch on and the green light displayed, turn the heating selector knob clockwise from the summer setting.. The boiler will fire up automatically when either the time clock/room stat or boiler stat calls for central heating, or a hot tap is opened for hot water. If a hot tap is opened the boiler gives priority to hot water delivery with the central heating on standby until the tap is closed.

The temperature of the radiators can be selected between 60ºC and 80ºC by turning the knob.

USING THE PROGRAMMABLE CLOCK

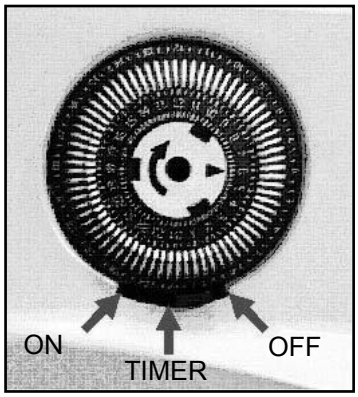

1. Set the correct time by rotating the minute hand until the arrowhead points at the correct time on the 24 hour dial.

2. Check the position of the manual override switch (just to the bottom of the clock face). This has three positions:

-Left: is ON overriding the timer mode

-Middle is timer mode, with ON, OFF, times governed by the time clock.

-Right position is OFF. The heating will not work at all regardless of the main boiler control switch except if triggered by the built in frost protection thermostat.

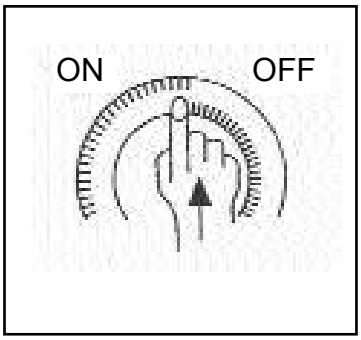

3. To set on/off times, move all the white tappets , in the outer ring, between the required 'on' and 'off' times.to the outer position. For example, if you want the heating to come on at 6am and switch off at 10am, move all the tappets outwards between these two times. Each tappet represents a quarter of an hour. Set as many on/off times as required within a 24 hour period

RED LIGHT-LOCK OUT

Should the boiler fail to ignite due to lack of gas poor weather conditions etc. It will “lockout” and the red neon will be displayed. To reset, turn the main control switch to off then turn on again. If the boiler constantly locks out, call your service engineer.

TURNING THE BOILER OFF

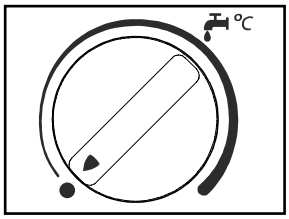

Turn the main control switch to the ● position.

NOTE: In this position the automatic safety devices such as frost protection and anti pump seizure are still operative. To shut down completely and isolate the mains supply the plug must be removed from the wall.

GENERAL GUIDANCE NOTES ON HOT WATER DELIVERY

The temperature of the hot water is governed by both the ambient temperature of the cold water supply and its flow rate through the boiler. I.E. at a flow rate of 13.6L/min there will be a maximum rise of 25ºC above ambient. At a flow rate of 6.8L/min there will be a rise of 50ºC above ambient, (the slower the flow rate, the greater the temperature rise).

The flow rate of the hot water is controlled by the hot outlet tap.

The temperature selector on the boiler is effective only when there is either a low water flow rate or a high ambient water temperature.

- The boiler can theoretically supply more than one outlet simultaneously However in practice the tap which is nearest will receive the most hot water. If the shower is in use and a kitchen tap is opened virtually all the hot water will be diverted to the kitchen as it offers the least resistance.

- If an outlet is too restrictive it will slow down the flow rate and increase the temperature. For example the shower - ensure the head is free from blockages caused by scale.

- Due to the restrictive nature of simple mixer showers it is wise to turn the temperature selector down on the boiler before using the shower.

- If a tap or shower head is too restrictive due to a fault or blockage, the flow rate will be reduced to below the rate at which the boiler is able to modulate resulting in a wide swing in temperatures. Either fix the restriction or turn the temperature selector on the boiler down.

- Caution: The boiler can produce water at over 70°C when in central heating mode. If you run a hot tap when the boiler has been heating the radiators, the initial flow through the hot tap could be very

hot. DO NOT PLACE YOUR HANDS under the tap or use the shower until this initial flow has passed.

- Allow time (30 seconds) for the temperature to stabilise after making an adjustment at the tap before making further adjustments.

APPLIANCE SAFETY LOCK-OUT

This boiler has a cut-out indicator built in to it. Whenever a malfunction is detected in the boiler, the boiler switches off automatically and the cut-out indicator lights up (red indicator light) To reset the boiler rotate the main control knob to the ● position and go back to the chosen position. Some lockout sequences require the thermistors to cool to within normal operating temperatures before the boiler will reset. The red indicator light should go out. IMPORTANT: Whenever the boiler has been left idle for any length of time, or when a new gas bottle is installed (propane models), the appliance may switch off due to the presence of air in the pipes. In cases such as these, repeat the ignition operation until all of the air has been purged from the system.

FROST PROTECTION

Providing the boiler power supply and gas supply is connected the boiler will automatically fire on minimum when near freezing conditions are detected. When the temperature in the system reaches 20°C it will switch off. For winter storage see notes at the end of this section.

NOTE:It is still necessary to drain the domestic hot and cold water system.

ANTI PUMP SEIZURE DEVICE

When central heating is not being used, but the boiler is in the summer setting (for domestic hot water only) the pump will automatically run for one minute every 24 hours to prevent it seizing. If the appliance has been shut down with the electrical supply switched off for a period, this device will not work. The pump may be found to have jammed when the appliance is switched back on. If so, consult your installer or service engineer.

NOTE: seized pumps are not covered under warranty.

PRESSURE GAUGE

The pressure gauge should indicate approximately between 0,8 and 1,6 bar. If the pressure is seen to decrease over a period of time there is a water leak. The boiler is fitted with a safety device to prevent it working below a pressure of 0.8 bar.

ROUTINE SERVICING

To ensure continued safe and efficient operation of the appliance it is recommended that it is checked and serviced as necessary at regular intervals. The frequency of servicing will depend upon the particular installation conditions and usage but in general once a year should be regarded as a minimum even if only occasional usage has occurred. It is the law that any service work MUST be carried out by a registered engineer such as CORGI registered personnel.

SAFETY

It is essential that these instructions are strictly followed for the safe and economical operation of this appliance. The appliance is a fan-assisted room sealed gas boiler and therefore the flue terminal MUST NOT BE OBSTRUCTED under any circumstances. If it is damaged, turn off the appliance and consult your installer, or service engineer. If it is known or suspected that a fault exists on the appliance it MUST NOT be used until the fault has been rectified by a competent person.

PRECAUTIONS AGAINST FREEZING DURING WINTER STORAGE

During cold periods and if the boiler is situated in a place liable to freeze, the D.H.W. circuit must be drained down as follows:
-Turn off the cold water Supply
-Open all the hot water outlet taps on the installation
-Release the drain plugs fitted at the lowest point of the pipework.
NOTE: There is no drain plug fitted to the DHW side of the boiler.
-When the operation is finished, close the hot water outlet taps and replace the drain plug.
-To put the boiler back into service, open the cold water supply.
NOTE: In a Caravan Holiday Home installation there may be a drain cock on the cold inlet under the van directly below the boiler which may be used. It is not necessary to drain the heating circuit if it has been filled with antifreeze.

A pre-winter check of the amount of antifreeze protection is strongly recommended. The level may have fallen due to leaks in the system requiring frequent refilling from the filling loop.

2.- GENERAL SPECIFICATIONS

The Fagor FEB-24E is a wall hung, room sealed, fan assisted, microprocessor controlled fully modulating gas combination boiler for providing both central heating and domestic hot water. It is particularly suitable for Caravan Holiday Home and Park Home use. Maximum heat output in either heating or hot water mode is 23.7.kW (80.840 Btu/h), and priority is always given to the supply of hot water.

NOTE: The central Heating power is factory set at 70% of its maximum.

The appliance is supplied with a standard concentric air/flue duct and wall terminal, however additional extension kits, vertical flue kit are available as optional extras.

The appliance is intended for use with sealed central heating systems and is supplied for use with propane gas.

The appliance includes the following components:

Induced draught fan for the extraction of combustion products and induction of combustion air.

Modulating gas valve with double safety valves

Circulation pump with manual anti-seizure device

Central heating expansion vessel.

Differential air pressure switch. Prevents the boiler firing if there is insufficient air supply due to a fault or blockage.

Water pressure switch. Prevents the boiler firing if there is less than 0.8 bar in the system.

Thermistors (NTC) There are two thermistors fitted for automatic control of the domestic hot water and the central heating flow temperature.

Safety thermostat Shuts down the boiler in the event of overheating. Resets after a few minutes cooling

Electronic controls, incorporating the following features:

- Temperature selection for central heating from between 60 to 85°C.
- Temperature selection for domestic hot water from between 35 to 60°C.
- Continuous modulation of the gas valve.
- Flame control by ionisation
- Ignition control
- Anti-frost control in the central heating circuit.
- Anti - seizure of the pump.

Schematic diagram- Hydraulic circuit

1.- Expansion vessel
2.- Pump with Automatic air bleed
3.- Water pressure switch
4.- Central heating thermistor
5.- Three way valve
6.- Overheat thermostat
7.- Air pressure switch
8.- Venturi
9.- Fan
10.- Sealed air box
11.- Copper heat exchanger
12.- Combustion chamber
13.- Ignition electrode
14.- Burner
15.- Flame sensing electrode
16.- Modulating gas valve
17.- Gas inlet
18.- D.H.W Thermistor
19.- Hot Water outlet
20.- Plate heat exchanger
21.- C.H flow
23.- Cold water inlet
24.- C.H return
25.- Pressure relief valve
26.- Automatic By-pass
27.- Expansion vessel valve
28.- Draining valve

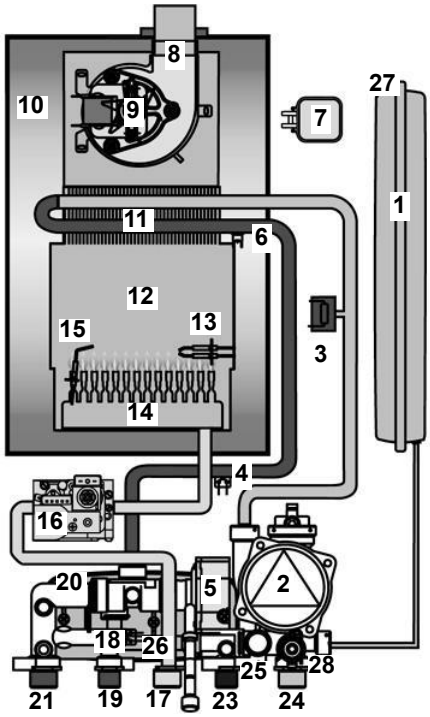

DIMENSIONS AND CONNECTIONS DETAILS

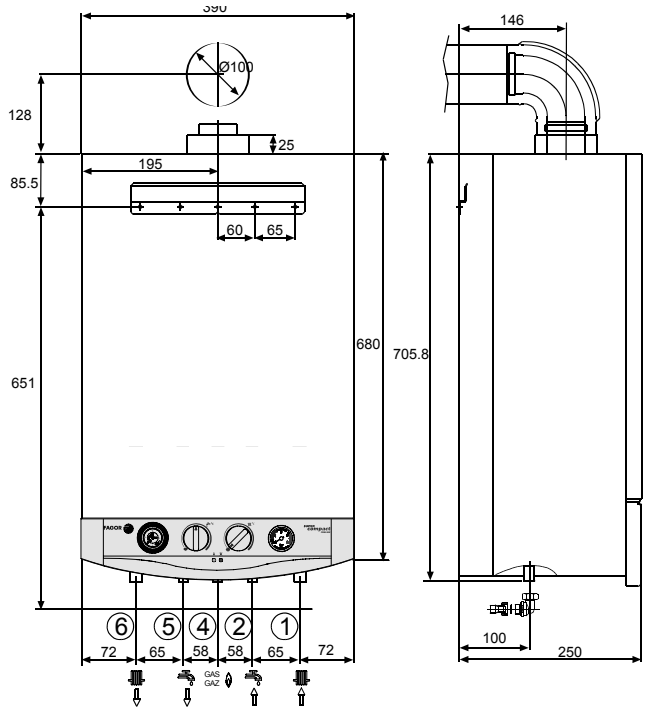

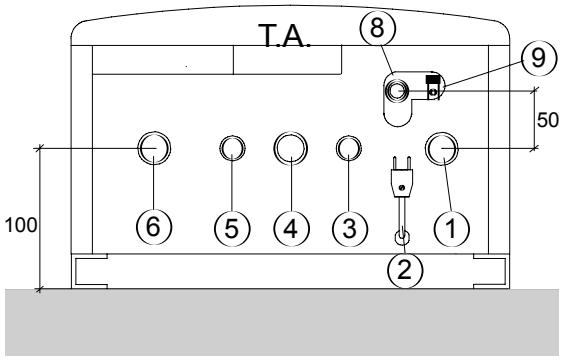

1.- 3/4” BSP Central heating return
2.- Mains cable
3.-1/2” BSP Domestic cold water inlet
4.- 3/4” BSP Gas inlet
5.- 1/2” BSP D.H.W. outlet
6.- 3/4” BSP Central heating flow
8.- Pressure Relief Valve
9.- Draining valve for central heating
T.A.:Room thermostat connection

ELECTRICAL CIRCUIT DIAGRAM

1.- Surge arrestor
2.- Mains connection
3.- Earth
4.- Fan
5.- Pump
6.- Ignition
7.- Burner solenoid valve 1
8.- Burner solenoid valve 2
9.- Front panel control
10.- 3 way valve
11.- Air pressure switch
12.- Room stat (optional)
13.-Room stat connector block
14.- Clock connection
15.- Modulating solenoid valve
16.- Flame sensor
17.- High limit stat
21.- Hot water thermistor
22.- Central heating thermistor
23.- Pressure switch
25.- Burner functioning indicator
26.- Lock out indicator light
30.- Clock
S4 Gas change bridge. Made- Propane. Break- Nat. Gas
P1 Maximum power adjustment
P2 Minimum Lighting pressure
P3 Output for central heating adjustment

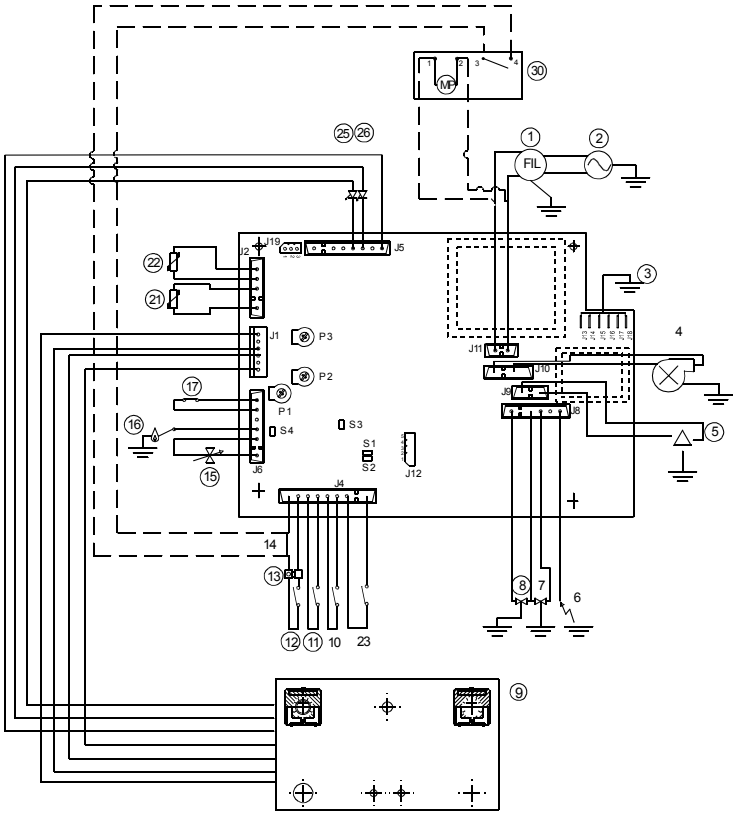

3.- TECHNICAL DATA

Model			FEB-24EUK
Category			II2H3P
Type			C_{12},C_{32},C_{42},C_{52},C_{82},B_{22}
Central heating and domestic hot water performances.	Maximum output	kW	23.7
		Btu/h	80,840
	Minimum output	kW	7.6
		Btu/h	26,151
Nominal central heating and domestic hot input (Gross)	Maximum	kW	28.9
	Minimum	kW	9.2
Nominal central heating and domestic hot water input (Nett)	Maximum	kW	26
	Minimum	kW	8.3
Domestic hot water flow rate at 25ºC (l/min)			13.6
Domestic hot water flow rate at 35ºC (l/min)			9.7
Nominal D.H.W. flow rate at 34ºC (l/min)			10
Minimum flow rate for activating D.H.W. (l/min)			2
Operating pressure (bar)	Maximum	Central heating	2.5
	Maximum	D.H.W	10
	Minimum D.H.W. activation		0.3
Expansion vessel capacity (1)			7
Temperature selection range (ºC)	Central heating circu it		60-85
	D.H.W.circuit		35-60
Gas inlet pressure (mbar)	Natural G-20		20
	Propane G-31		37
Gas consumption (Hi)	Natural G-20 (m3/h)		2.75
	Propane G-31 (kg/h)		2.04
Electrical supply (V/Hz)			230V~50Hz
Max.power consumption (W)			120
Dimensions (mm)	Height		680
	Width		390
	Depth		254
Minimum clearance (mm)	Top		200
	Bottom		150
	Sides		5
	Front		5
	Gas inlet		18
	Domestic cold water inlet		15
	D.H.W.outlet		15
	Central heating flow		22
	Central heating return		29
Net weight (kg)			29
Type of gas	Propane G-31 (FEB-24E UK GLP)		X
92/42/EEC Directive			**

4.- GENERAL INSTALLATION REQUIREMENTS

4.1 RECOMMENDATIONS

FOR THE USER

This appliance must be installed, adjusted or adapted for use with another type of gas, only by a qualified and competent person.
Its quality and a correct installation will ensure that your heater works properly.

GAS SAFETY (INSTALLATION AND USE) REGULATIONS 1998 (As amended).

It is the law that all gas appliances must be installed by a registered person, in accordance with the above regulations.
Failure to install appliances correctly may lead to prosecution.
It is in your own interest, and that of safety, to ensure that the law is complied with.
In addition to the above regulations, this appliance must be installed in accordance with the current IEE Wiring regulations, Heath and Safety Document No 635 'The Electricity at Work Regulations.
It should also be in accordance with the relevant recommendations in the current editions of all relevant National Standards. Your particular attention is drawn to the following standards relevant to an installation in Leisure Accommodation Vehicles:
BS 5482 part 2 Installations in caravans and non permanent dwellings.
BS 5482 Part 3 Installations in Boats
BSEN721 Leisure accommodation vehicles ventilation requirements.
BSEN 1949 Installation of LPG System for Habitational Purposes in Leisure Accommodation Vehicles.
IMPORTANT: Manufacturers instructions must NOT be taken in any way as over-riding statutory regulations.

4.2 BOILER LOCATION

In positioning the boiler, the following limitations MUST be observed:
The position must allow for a suitable flue termination to be made.
The combination boiler must be installed on a flat vertical wall capable of supporting its weight .
- If the boiler is in a room containing a bath or shower, the boiler controls and power supply must be so situated that they can not be touched by the person using the bath or shower. Attention is drawn to the current IEE Wiring Regulations, and in Scotland the electrical provisions of the Building Regulations applicable in Scotland.
- A compartment used to enclose the appliance MUST be designed and constructed specifically for the purpose. An existing cupboard, or compartment, may be used provided it is modified accordingly.
- Ventilation requirements as stated in this manual must be observed.
- Minimum clearance as stated in the technical data must be observed.

4.3 FLUE TERMINAL POSITION

- The boiler MUST be installed so that the terminal is exposed to the external air.
- It is important that the position of the terminal allows free passage of air across it at all times.
- It is ESSENTIAL TO ENSURE, that products of combustion discharging from the terminal cannot re-enter the building, or vehicle, through ventilators, windows, or other sources of natural air infiltration, such as other flues etc, with the exception of doors, but not the opening windows thereof.
- The minimum acceptable dimensions from the terminal to obstructions and ventilation openings is as follows:

Where the terminal is fitted in a position to which children, the elderly, or disabled people have access (less than 1.5m above steps, decking or ground), a suitable terminal guard should be fitted.

Directly below an opening fixed vent windows, etc.	300mm
Adjacent to an opening fixed vent windows, etc.	300mm
Below gutters.	75mm
Below eaves	200mm
From a vertical drain pipe or soil pipe	75mm
From an internal or external corner	300mm
Vertically from a terminal on the same wall	1500mm
Horizontally from a terminal on the same wall	300mm

In certain weather conditions the terminal may emit a plume of steam.

4.4 MINIMUM CLEARANCES

Minimum clearances of 5mm to the front and sides of the boiler must be observed. However full access from the front in the form of an opening door, must be given to allow access to the controls and for servicing.

200mm above the top of the boiler case is required for the flue assembly.

150mm is required below the boiler to allow easy access to the gas isolation cock.

4.4 VENTILATION REQUIREMENTS

The following notes are for general guidance:

- The Morco FEB-24E is a room sealed appliance and needs no purpose provided combustion air ventilation.

- If the boiler is to be built into a small cupboard or compartment (i.e. at minimum clearances)and overheating can be forseen (i.e. close proximity to a cooking appliance etc) permanent air vents are recommended for cooling purposes in the cupboard or compartment . The following table gives the minimum effective areas of the vents.

Position of air vent	Air from room/int space	Air direct from outside
HIGH LEVEL	13000 mm^2	7500 mm^2
LOW LEVEL	13000 mm^2	7500 mm^2

4.5 ELECTRICITY SUPPLY

A 3 amp fused three pin plug for use with 230V-50Hz is supplied fitted to the appliance.

It should be used with a shuttered socket outlet complying with BS 1363

THIS APPLIANCE MUST BE EARTHED

4.6 GAS SUPPLY

- A Propane gas supply at 37m bar is required.

- Ensure the regulator is of sufficient capacity to carry the maximum boiler input plus the demand for any other installed appliances.

- Ensure the connection between the supply/bottle and the caravan holiday home or park home is designed so that no pressure drop occurs.

- No more than 3 m of 15mm pipe should be used. Where the supply exceeds 3 m the pipe should be suitably sized only reducing to 15mm before the boiler

- A full bore isolation cock must be fitted in the supply close to the boiler or use morco part number FW0391.

- The complete installation must be tested for gas soundness.

4.7 WATER SYSTEMS - GENERAL

- This appliance is designed for connection to sealed central heating water systems.

- Prior to filling the central heating system (see section 6.2) It is recommended that where the system is installed in a caravan holiday home, subject to non - continuous use, anti-freeze is used.

4.8 REQUIREMENTS FOR SEALED WATER SYSTEMS

The heating system design should be based on the following information:

- The available pump head is given below.

- A minimum flow rate corresponding to a heating differential of 20°C must be obtained at all times.

- A heating by-pass should be fitted to ensure that the above condition is satisfied. If thermostatic radiator valves are to be installed, at least one radiator should be without a thermostatic valve (usually the bathroom radiator).

- A sealed system must only be filled by a competent person using an approved filling loop connected between the mains water supply pipe and the central heating return pipe. Once filled the loop should be disconnected and left adjacent to the boiler.

AVAILABLE PUMP HEAD

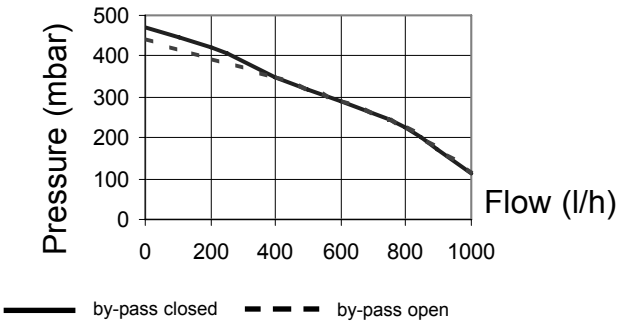

- The following paragraphs outline the specifications of the items fitted to the boiler.

Expansion vessel.

The following table gives the maximum system volume that the integral 7 l expansion vessel can sustain under different temperature conditions. If the system volume exceeds that shown, an additional expansion vessel must be fitted and connected to the heating system primary return pipe as close as possible to the appliance. If an extra vessel is required, ensure that the total capacity of both vessels is adequate. If the pressure gauge indicates 2.2 bar or greater when the appliance is at maximum temperature with all radiators in circulation an extra expansion vessel is required.

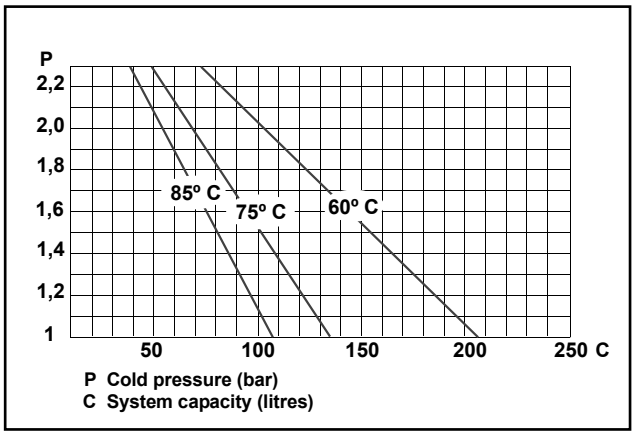

Pressure relief valve

A pressure relief valve set 3 bar (43.5psi) is fitted and a discharge pipe is routed to the outside of the appliance. This discharge pipe should be extended to terminate safely away from the appliance to a point where a discharge would not cause damage to persons or property but would be detected. The pipe should be able to withstand boiling water, be a minimum of 15mm in diameter, and not include any upward pipe runs or horizontal runs prone to freezing.

4.9 D.H.W. SYSTEMS

- Check that mains supply pressure is within the prescribed limits (refer to 'technical data' page 7) If necessary, a pressure reducing valve should be fitted to the mains supply before D.H.W. inlet connection.

- The DHW performance is summarised in the graph:

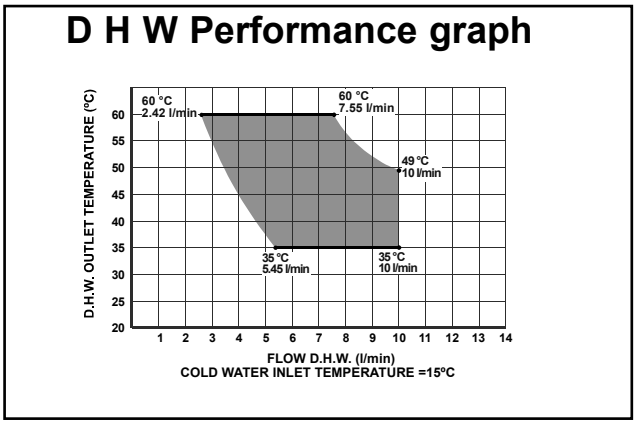

- The final 1000 mm (40 in) of the mains supply pipe to the boiler must be copper.

- If the appliance is installed in an area where the temporary hardness of the water supply is high, say over 150 ppm, the fitting of an in line scale inhibitor may be an advantage.

- Devices capable of preventing the flow of expansion water: e.g. non return valves and/or loose - jumpered stop cocks should not be fitted unless separate arrangements are made for expansion water.

- If a non-return valve is fitted in the incoming water supply - e.g. in line with scale inhibitor then a D.H.W. expansion vessel MUST be obtained and fitted.

- For specific information relating to fittings (exAmPLe:. Shower, washing machines etc.) suitable for connection in the D.H.W. circuit, consult the Local Water Undertaking, however the following information is given for guidance.

Domestic hot/cold water supply taps and mixing taps - All equipment designed for use at mains water pressure is suitable.

Showers - Any mains pressure shower is suitable, but if the unit has a loose head which may become immersed in bath water either an anti-syphonage device must be fitted, or the length of the flexible hose must be reduced so that it cannot fall closer than 13 mm (1/2 in) to the top of the bath.

5.- INSTALLATION INSTRUCTIONS

5.1 BOILER PACKAGING

The boilers are supplied in different packagings:

- Boiler
- Flue system (separate packaging)

5.2 FITTING THE BOILER.

- Decide where the boiler is to be fixed on the wall taking into account the installation requirements detailed in section 4.2 and the clearances and dimensions described in the the technical data.

The centres for the hanging strap fixing are 85mm below the top of the boiler casing, see fig below. The flue pipe centre is 213mm above the hanging strap centres. NOTE: a fall of about 2º - 3º should be allowed on the flue pipe to stop water ingress into the boiler.

A screw fixing should be made on the bottom rail of the boiler to secure it during transport.

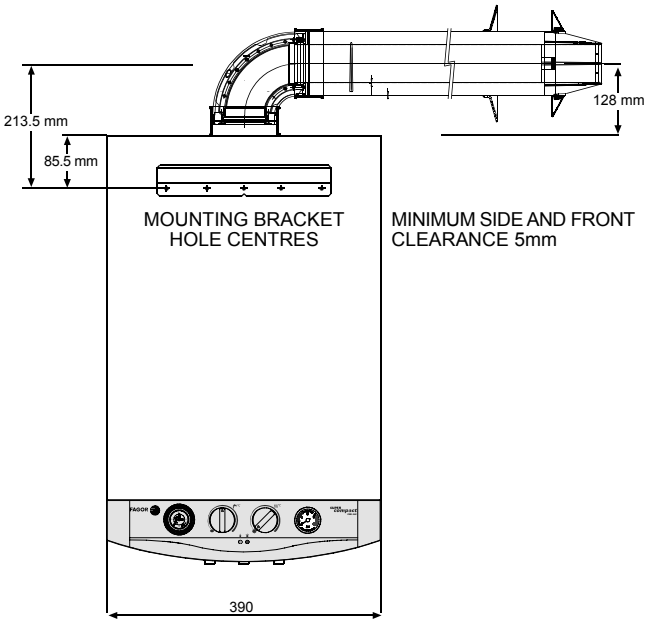

5.3 WIRING INSTRUCTIONS

Warning: observe the usual precautions to ensure that the electricity supply is isolated before commencing any installation or service work.

- The appliance is fitted with a 3 amp. fused 3 pin plug for use with 230 V~50Hz. It should be fitted to a shuttered socket outlet complying with BS 1363

WARNING: THIS APPLIANCE MUST BE EARTHED.

ROOM THERMOSTAT:

This appliance may be used in conjunction with an external room thermostat.

The voltage between the contacts of the room thermostat is 24V (normally closed). Any 24V controls may be used, but gold contacts are recommended.

DO NOT under any circumstances use a mains supply to the stat as you will blow the P.C.B. in the boiler. Only voltage free switching stats should be used.

Connection of a room thermostat (optional).Proceed as follows:

- Unscrew the screw (A) as it shows figure 1, open the bottom cover, where the connector of the room thermostat is placed.
- Press out the plastic disc (B) using a screwdriver to form a hole so you can pass through the wires of the room stat.
- Replace cover.

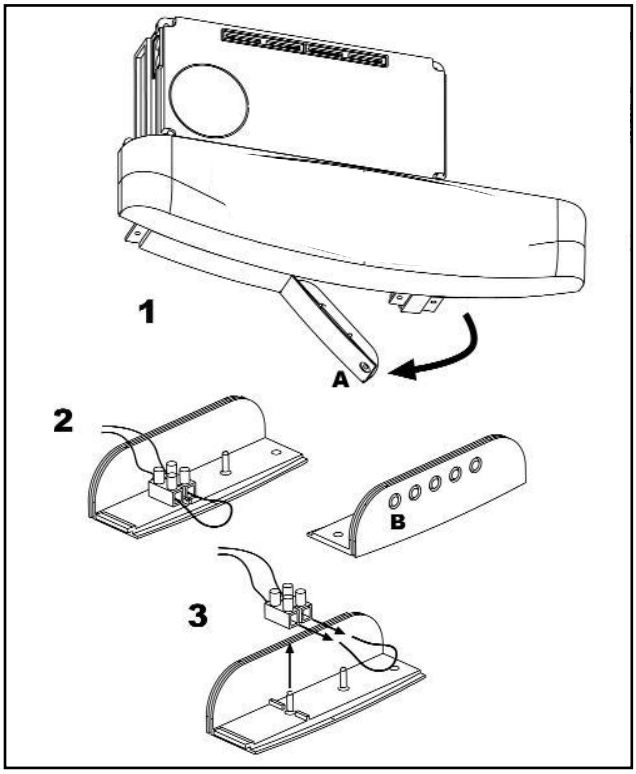

The room thermostat must be installed on a wall which is free from any objects and free from direct contact with either sunlight or draughts.

5.4 WATER AND GAS CONNECTION

Connect the boiler up in such a way as to leave the connecting pipes self supporting and free from any stress.

Check that the gas pipe complies with the requirements of section 4.6

In order for the boiler to function correctly and to have a long working life, the central heating system must be properly designed, making sure that the temperature difference between the flow and the return will not be greater then 20°C.

5.5 AIR/FLUE SYSTEM

The standard flue kit supplied with the FEB-24E is a 1m horizontal coaxial air/flue kit as shown below.

There are various other options available, including a vertical flue kit and other variations on the horizontal kit. Please ask for details. Never use a flue system which is not specifically approved for use with this appliance.

The horizontal pipe may be cut down to the length required. The flue must be fitted with a .2° or 3° downwards incline to prevent any water or condensation from entering in the boiler.

Where a short run of less than 1 m is used, such as in a caravan holiday home, the air restrictor ring must be inserted into the boiler flue spigot before fitting the elbow.

HORIZONTAL FLUE Ø 60-100mm COAXIAL

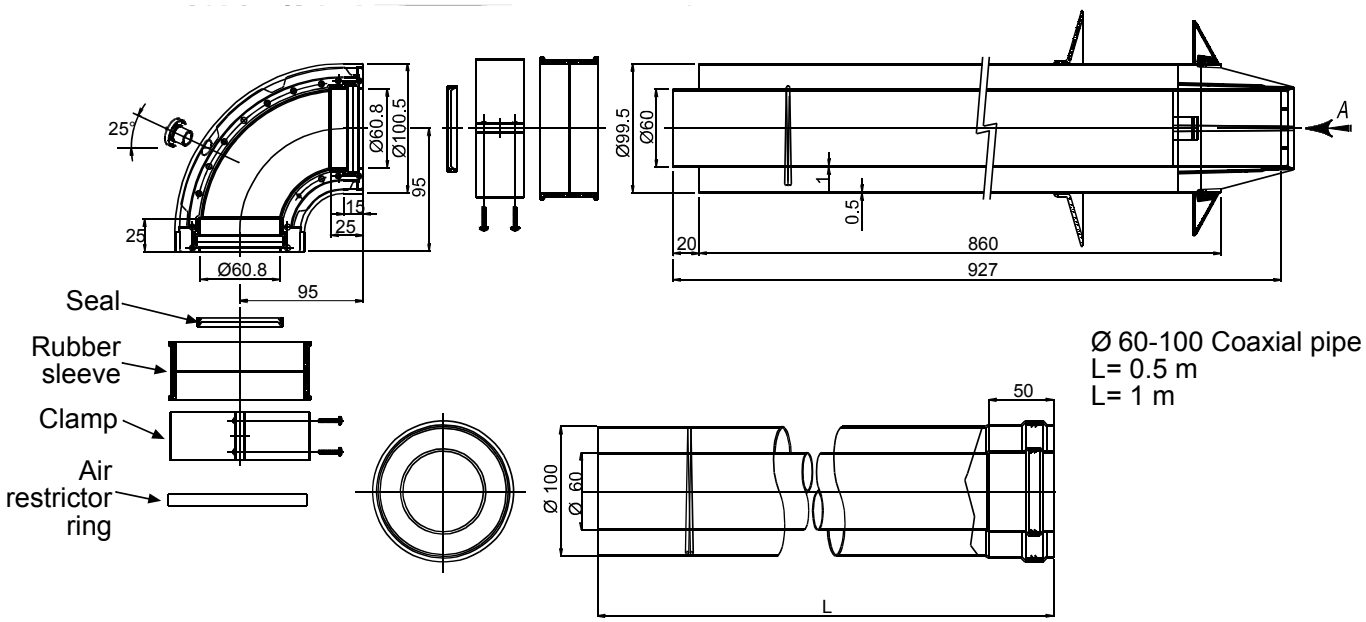

6.- COMMISSIONING INSTRUCTIONS

Before commissioning the appliance, the whole gas installation including the meter (if fitted) MUST be purged and tested for gas soundness.

IMPORTANT: open all doors and windows, extinguish naked lights, and DO NOT SMOKE whilst purging the gas line.

Before commencing the commissioning procedure, ensure that the central heating system and the domestic hot and cold water system have been flushed. This will remove contamination which could cause the boiler to fail.

6.1 DOMESTIC HOT WATER

Turn on the DHW isolation valve.

Fill and vent the installation by turning on the various hot water taps in the installation

Make sure that there are no leaks in the installation.

6.2 CENTRAL HEATING CIRCUIT

In order for the boiler to function correctly, the pressure in the central heating circuit must be between 0.8 and 1.6 bar when cold.

Both the boiler and the central heating installation must be purged of any air in the water pipes which may cause noise and the incorrect functioning of the system.

The boiler is fitted with an automatic air vent.

In order to fill the installation correctly the following sequence must be followed:

- Open one or more radiator bleed vent screws.

- Fill the central heating circuit using the approved method given in section 4.8

- Turn off each of the air vents as water starts to appear from them.

- Turn off the filling tap when the pressure gauge exceeds 1.6 bar.

- Turn the main control switch to the winter setting, making sure that the pump runs. The pump will not run if there is insufficient pressure.

- Vent the central heating circuit once more. Then let the pressure in the circuit settle at 1.6 bar. If necessary open the pressure relief valve to reduce the pressure in the system.

- Make sure that there are no leaks in the installation.

6.3 GAS CIRCUIT

Purge the gas circuit as described above. Turn on the gas cock to the installation and check that there are no leaks using leak detection fluid.

6.4 SETTINGS

Before leaving the factory the boiler is pre-set in accordance with the information on the data plate, and therefore needs no further adjustment.

6.5 INITIAL OPERATION

6.5.1 Preliminary warnings

- Make sure that the central heating circuit is completely full and vented. The pressure gauge should indicate a pressure of between 0.8 and 1.6 bar.

- Make sure that the air intake and the flue outlet are not blocked.

6.5.2 Domestic hot water service

To turn on the boiler turn the main control switch on so the green light shows The boiler is then ready to supply D.H.W. on demand.

Whenever a hot tap is opened the boiler automatically fires up to deliver hot water. The temperature selector control should be set at maximum. If the ambient water temperature is high (as in a hot climate) then the hot water temperature may be reduced by using this knob.

6.5.3 Hot water and central heating service

Set the tappets on the time clock to an on position and the main control switch on so the green light is on. The room stat (if fitted) to max temp. Then turn the central heating selector clockwise. The boiler will fire up. By means of the central heating temperature selector control knob, any water temperature of between 60 and 85°C may be selected. The boiler will remain on until the temperature selected on the room thermostat or on the boiler itself is reached.

Whenever there is a demand for D.H.W. on the central heating setting, the boiler is ready to supply it giving priority to the D.H.W. with the central heating on standby until the D.H.W. demand ceases.

6.5.4 Turning the boiler off

- Turn the main control switch to the O setting.
- Turn off the gas supply to the boiler.

6.5.5 Appliance safety lock-out

This boiler has a cut-out indicator built in to it. Whenever a malfunction is detected, the boiler switches off automatically and the indicator lights up

(red pilot light).

To restart the boiler Set the main control on the ● position and then turn it back to the chosen position. The red indicator should go out.

IMPORTANT: Whenever the boiler has been left idle for any length of time, or when a new gas bottle is installed (propane models), the appliance may switch off due to the presence of air in the pipes. In cases such as these, the main control switch may be turned to ● position several times until all the air is expelled.

6.6 FINAL CHECKS

- Re-light and test for gas soundness

- Set the C.H. and D.H.W. temperature selectors to the required settings.

- Ensure that the time clock and/or room stat (if fitted) are set to the required setting (s).

6.7 USER'S INSTRUCTIONS

Upon completion of testing the system, the installer should:

- Give the 'users Instructions' to the owner and emphasise their responsibilities under the "Gas Safety (Installation and Use) Regulations 1998"

- Explain and demonstrate the lighting and shut down procedures.

- Advise the owner on the efficient use of the system, including the use and adjustment of all system controls for both D.H.W. and C.H.

- Advise the user of the precautions necessary to prevent damage to the system, and to the building, in the event of the system remaining inoperative during frost conditions.

- Explain the function of the boiler lock-out devices, and how to reset it. Emphasise that if cut - out persists, the boiler should be turned off and the installer or service engineer consulted.

- Stress the importance of an annual service by a CORGI registered heating engineer.

7.- ROUTINE SERVICING INSTRUCTIONS

To ensure continued efficient operation of the appliance, it is recommended that it is checked and serviced as necessary at regular intervals. The frequency of servicing will depend upon the particular installation conditions and usage but in general once a year should be adequate.

It is the law that any service work must be carried out by registered personnel (C.O.R.G.I.).

Before commencing any service operation, ISOLATE the mains electric supply, and TURN OFF the gas supply at the main service cock. Service the appliance by following the full procedure detailed below.

MINIMUM CLEARANCE REQUIRED FOR SERVICING AND REPLACEMENT OF PARTS

* Distance at the side

The minimum distance necessary for carrying out maintenance operations, is 5 mm

* Distance at the top

The minimum distance necessary for carrying out maintenance operations, is 200mm

* Distance at the bottom

The minimum distance necessary for carrying out maintenance operations, is 250 mm.

* Distance at the front

The minimum distance necessary for access during maintenance operations, is 250mm, although this distance may be reduced to 5 mm, as long as a door is installed which can be removed when it comes to carrying out maintenance work.

FRONT COVER REMOVAL

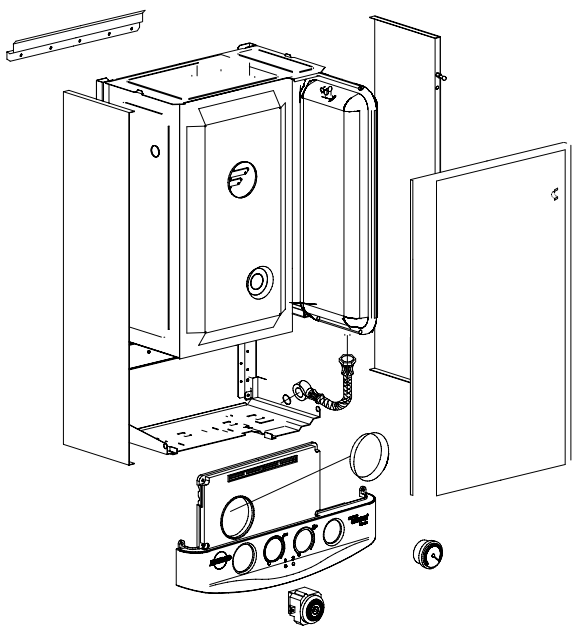

The cover is held in place by four spring clips and can be removed by grasping it at the top and pulling forward sharply to release.

Further access can be gained by removing the control panel. (Four screws), and moving down the electronic box.

BURNER AND HEAT EXCHANGER INSPECTION AND CLEANING

The front of the sealed air box must first be removed (8 screws) and care should be taken to avoid damaging the seal. The combustion chamber cover can then be removed (6 screws) and gas connections taking care not to damage the delicate insulation material inside.

Inspect the burner and heat exchanger fins for debris and soot. Check also for rubbish below the burner.

IGNITION AND DETECTION ELECTRODES

With the combustion chamber cover removed check the condition of the electrodes for any sign of wear or damage.

WATER CIRCUIT CHECKS

Inspect the pipe work inside the boiler for leaks. Check that the pressure in the system is correct (0.8 to 1.6 bar). Check the operation of the relief valve by turning ¼ turn and check it closes without further leakage.

Check the correct operation of the gauge. The pressure should increase slightly as the temperature rises. Finally check the filters which is situated in the cold water inlet pipe

BURNER PRESSURE

This is factory set, but should you suspect a problem proceed as follows: There is an easily accessible burner pressure nipple on the gas feed pipe, between the burner and the modulating gas valve.

The burner pressure nipple should give a reading of 35 mbar when the boiler is at full power on D.H.W. mode. Remove the main cable plug to the gas valve to get a minimum burner pressure reading which should be 4,4 mbar.N.B. There is a logic program built into the central heating enabling it to detect when it is connected to a small system. This may prevent the burner from firing on full (max press) so ensure burner pressure is only tested in DHW mode.

FINAL CHECKS

Turn all the controls to their max position so that the appliance begins to function. Check for gas leaks using a suitable detector.

Check the boiler functions correctly in both central heating and domestic hot water modes. The green light will start flashing when the boiler is firing in either mode.

8.- TROUBLESHOOTING

The FEB-24E has a self diagnostic system built into its printed circuit board. Should a safety related, or various other faults occur, then the boiler will failsafe by locking out, which is indicated by the red neon on the control panel.
The fault can be identified by the different sequences in which the red neon flashes and the duration the neon stays illuminated. The electronic failsafe is also backed by a mechanical means of protection, should the electronics fail to detect a fault. These mechanical forms of protection will protect and ensure the safe shutdown of the boiler.
The software protection built into the P.C.B. will run a system check on components which are essential to the safe operation of the boiler. This occurs before any ignition sequence takes place. If any component is found to be faulty or out of a predetermined range, then lockout will be displayed.

FAULT CODES:

Each fault code begins and finishes with the red neon illuminated for 5 seconds, the relevant fault is then indicated by the number of 1 second flashes which occur between the 5 second illuminations. These range from none to 12 flashes. Please be patient when counting the sequence as the correct identification of the fault will save time on isolating and rectifying the problem.

EXAMPLES:

Fault 4, P.C.B. failure, would display the following sequence of the red neon:

5 seconds 1 sec 1 sec 1 sec 1 sec 5 seconds

N.B. The sequence repeats itself until either the reset button is depressed or the fault is rectified. Some faults require the component temperature to return to within operating range before reset. Also some faults may take up to 3 minutes before lockout is displayed. E.G. Fan failure/ water overheating.

CODE	DESCRIPTION	FAULT
0	**Repeating 5 second flashes only with no 1 second flashes**	Lack of gas or ignition problems Flame supervision failure Burner on but flame indicator off Minimum burner pressure too low
1	**One 1 second flash**	Air pressure switch failure / Fan failure
2	**Two 1 second flashes**	Water Pressure below 0.7 bar
3	**Three 1 second flashes**	Hi limit thermostat failure
4	**Four 1 second flashes**	Printed circuit board failure
5	**Five 1 second flashes**	Flame supervision failure, indicator light on, burner off
6	**Six 1 second flashes**	Water overheating
7	**Seven 1 second flashes**	Control panel failure
9	**Nine 1 second flashes**	Gas valve control circuit failure
10	**Ten 1 second flashes**	Domestic hot water thermistor failure
12	**Twelve 1 second flashes**	Central heating thermistor failure

For more detailed servicing information, workshop manuals, technical advice, spare parts, product training, please phone us on 01482 325456 or contact us at the address below. Our qualified C.O.R.G.I. registered personnel are ready to help and advise you.

MORCO PRODUCTS LTD, MORCO HOUSE, RIVERVIEW RD, BEVERLEY HU17 OLD

TEL:01482 325456 FAX:01482 212869 EMAIL: SALES@MORCOPRODUCTS.CO.UK
WEBSITE: WWW. MORCOPRODUCTS.CO.UK

24/06/05 N51J017F7